MAXIM
1-877-MAX-LIFT

GROVE®

RT600E

product guide

contents

features

- 33-105 ft. (10-32 m) 4-section full power boom
- 29-51 ft. (8.8-15.5 m) telescopic swingaway extension
- Max main boom tip height of 112 ft. (34 m)
- "E" Series cab
- Max overall tip height 162 ft. (49.3 m)
- 40/50 ton (40/45 mt) capacity
- One 2-stage double-acting telescoping cylinder
- 3 position outriggers, max spread 22.5 ft. (6.9 m)
- Cummins 6BT 5.9L diesel, 6 cyl., turbocharged engine

Rough Terrain Hydraulic Crane

Manitowoc Crane Group

features

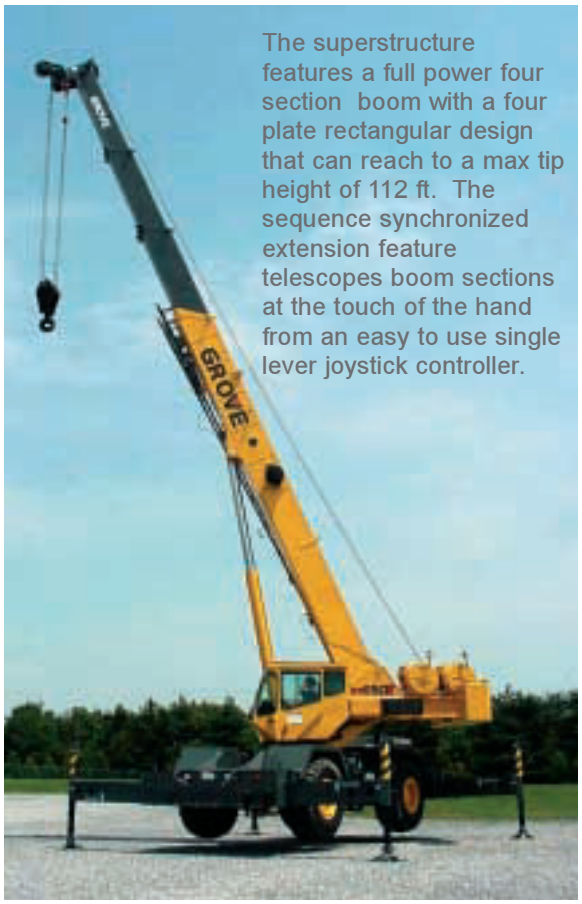

The superstructure features a full power four section boom with a four plate rectangular design that can reach to a max tip height of 112 ft. The sequence synchronized extension feature telescopes boom sections at the touch of the hand from an easy to use single lever joystick controller.

A telescopic swingaway lattice extension easily stows on the side of the base boom for easy transport. With a range of 29-51 ft. the max tip height reaches 162 ft. with a capacity of 6,000 lbs. An optional fixed lattice is also available, reaching a max height of 141 ft.

Optional full length aluminum decking is also available.

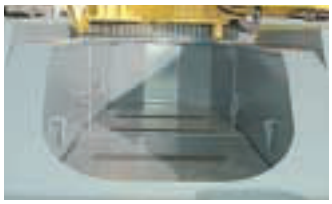

Features common to the Grove “E” Series cab include:

- hot water heater/defroster
- single axis joystick controllers
- sliding skylight and adjustable sunscreen
- engine instrumentation
- full accoustical lining

The PAT iFlex 5 graphic display LMI includes a work area definition system which allows the operator to define a preferred working area.

Large open stowage compartment for tools and rigging accessories.

The RT600E uses a 11,250 lbs. pinned-on counterweight. Cable power is provided through Grove model HO30G-16G grooved drum hoists with 16,800 lbs. permissible line pull. Max line speed is 593 fpm. Both the main and optional auxiliary hoists have cable capacity up to 450 ft.

Superstructure

Boom

33 ft. - 105 ft. (10.1 m - 32 m) four-section, full-power synchronized boom.
Maximum tip height: 112 ft. (34.1 m).

*Optional Fixed Swingaway Extension

29 ft. (8.8 m) offsettable lattice swingaway extension. Offsettable at 0°, 25° and 45°. Stows alongside base boom section. Maximum tip height: 141.5 ft. (43.1 m).

*Optional Telescopic Swingaway Extension

29 ft. - 51 ft. (8.8 m - 15.5 m) telescoping lattice swingaway extension. Offsettable at 0°, 25° and 45°. Stows alongside base boom section. Maximum tip height: 162 ft. (49.3 m).

Boom Nose

Three nylatron sheaves mounted on heavy-duty tapered roller bearings with removable pin-type rope guards. *(Four sheaves with optional 35 x 7 wire rope.) Quick-reeve type boom nose. *Optional removable auxiliary boom nose with removable pin type rope guard.

Boom Elevation

One double-acting hydraulic cylinder with integral holding valve provides elevation from -2° to 78°.

Load Moment & Anti-Two Block System

Standard “Graphic Display” load moment and anti-two block system with audio-visual warning and control lever lockout. These systems provide electronic display of boom angle, length, radius, tip height, relative load moment, maximum permissible load, load indication and warning of impending two-block condition. The system defaults to 360° on rubber chart. The standard Work Area Definition System allows the operator to pre-select and define working areas. If the crane approaches the pre-set limits, audio-visual warnings aid the operator in avoiding job-site obstructions.

Cab

Full vision, all steel fabricated with acoustical lining and tinted safety glass throughout. Deluxe seat incorporates armrest-mounted hydraulic single-axis controllers. Dash panel incorporates gauges for all engine functions. Other standard features include: hot water heater/defroster, cab circulating air fan, sliding side and rear windows, sliding skylight with electric wiper and sunscreen, electric windshield wash/wipe, fire extinguisher, seat belt and circuit breakers.

Swing

Planetary swing with foot-applied multi-disc brake. Spring applied, hydraulically-released swing brake and plunger-type, one position, mechanical house lock operated from cab. *Optional 360° mechanical swing lock. Maximum speed: 2.5 RPM.

Counterweight

11,250 lbs. (5 103 kg) pinned to superstructure.

Hydraulic System

Three main gear pumps with combined capacity of 103 GPM (391 L/min), 135 GPM (511 L/min) with optional air conditioning. Maximum operating pressure: 3500 psi (26.2 MPa)

Return line type filter with full flow by-pass protection and service indicator. Replaceable cartridge with micron filtration rating of 5/12/16. 134 gallon (509 L) reservoir. Hydraulic oil cooler. System pressure test ports.

Hoist Specifications
Main and Auxiliary Hoist: Grove Model HO30G-16G

Planetary reduction with automatic spring applied multi-disc brake. Grooved drum. Electronic hoist drum rotation indicator and hoist drum cable followers.

Maximum Single Line Pull:	18,180 lbs (8 246 kg)
Maximum Single Line Speed:	588 FPM (179 m/min)

Maximum Permissible Line Pull:
16,800 lbs. (7 620 kg) w/standard 6 x 37 class rope
16,800 lbs. (7 620 kg) w/optional 35 x 7 class rope

Rope Diameter:	3/4 in. (19 mm)
Rope Length:	450 ft. (137 m)
Rope Type:	6 x 37 Class EIPS IWRC
Optional:	35 x 7 class rotation resistant
Maximum Rope Stowage:	694 ft. (211 m)

specifications

Carrier

Chassis

Box section frame fabricated from high-strength, low alloy steel. Integral outrigger housings and front/rear towing and tie down lugs.

Outrigger System

Four hydraulic telescoping single-stage double box beam outriggers with inverted jacks and integral holding valves. Three position setting. All steel fabricated, quick-release type round outrigger floats, 24 in. (610 mm) diameter. Maximum outrigger pad load: 69,100 lbs. (31 344 kg).

Outrigger Controls

Controls and crane level indicator located in cab.

Engine

Cummins 6BT 5.9L diesel, six cylinders, turbocharged, 173 bhp (129 kW) (Gross) @ 2,500 rpm. Maximum torque: 530 ft. lbs. (719 Nm) @ 1,500 RPM.

Fuel Tank Capacity

58 gallons (220 L)

Transmission

Full powershift with 6 forward and 3 reverse speeds. Front axle disconnect for 4 x 2 travel.

Electrical System

Two 12-volt maintenance free batteries. 12-volt starting and lighting, circuit breakers. *Optional battery disconnect switch.

Drive

4 x 4

Steering

Fully independent power steering:
Front: Full hydraulic, steering wheel controlled.
Rear: Full hydraulic, switch controlled.
Provides infinite variations of 4 main steering modes: front only, rear only, crab and coordinated.
“Rear steer centered” indicating light.
4 wheel turning radius - 21 ft. (6.4 m)

Axles

Front: Drive/steer with differential and planetary reduction hubs rigid-mounted to frame.
Rear: Drive/steer with differential and planetary reduction hubs pivot-mounted to frame. Automatic full hydraulic lockouts on rear axle permit oscillation only with boom centered over the front.

Brakes

Full hydraulic split circuit disc-type brakes operating on all wheels. Spring-applied, hydraulically released transmission-mounted parking brake.

Tires

*23.5 x 25 - 20PR bias earthmover type.
*23.5R25 radial earthmover type.

Lights

Full lighting package including turn indicators, head, tail, brake and hazard warning lights.

Maximum Speed

24 MPH (39 km/h).

Gradeability (Theoretical)

78% (Based on 75,000 lbs. [34 020 kg] GVW) 23.5 x 25 tires, pumps engaged, 105 ft. (32 m) boom, and tele-swingaway.

Miscellaneous Standard Equipment

Full width steel fenders, dual rear view mirrors, hookblock tiedown, electronic back-up alarm, light package, front stowage well, tachometer, rear wheel position indicator, 36,000 BTU hot water heater, hoist mirrors, engine distress A/V warning system. Auxiliary hoist control valve arrangement (less hoist). Ether injection cold start aid (less canister) and immersion type engine block heater, 120V 1500 watt.

*Optional Equipment

*VALUE PACKAGE: includes 29-51 ft. (8.8-15.5 m) offsettable telescoping swingaway, 360° NYC style swing lock, and auxiliary hoist package.
*AUXILIARY HOIST PACKAGE (includes Model HO30G-16G auxiliary hoist with electronic hoist drum rotation indicator, hoist drum cable follower, 450 ft. (137m) of 3/4 in.(19mm) 35 X 7 class wire rope, auxiliary single sheave boom nose.)
*AUXILIARY LIGHTING PACKAGE (includes cab mounted, 360° rotation spotlight, cab mounted amber flashing light, and dual base boom mounted floodlights.)
*CONVENIENCE PACKAGE (includes in cab LMI light bar)
*Air Conditioning
*Full-length aluminum decking
*Pintle hook - rear
*360 degree positive swing lock
*Battery disconnect switch
*Cab-controlled cross axle differential lock (front and rear)
*Manual hydraulic pump disconnect
*PAT datalogger
*Rubber mat for stowage trough
*Mounting hardware for gooseneck/trailer attachment

*Denotes optional equipment

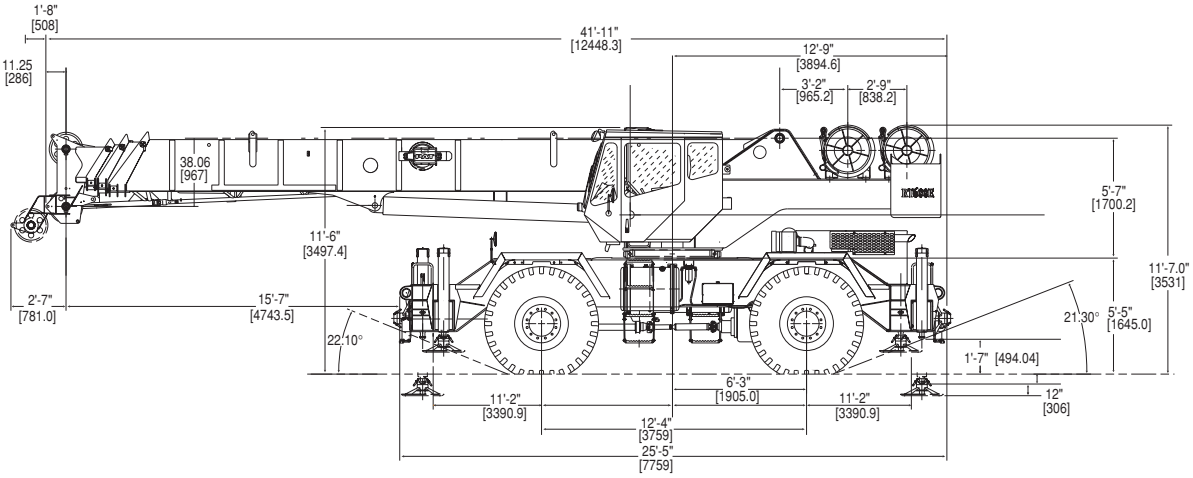

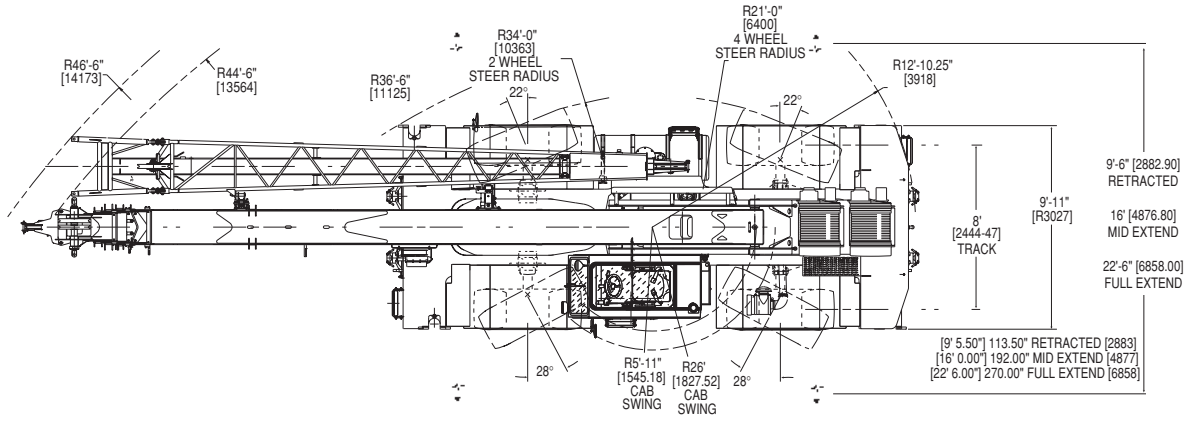

Note: [ ] Reference dimensions in mm

Weights

	GVW		Front		Rear	
	lb.	kg	lb.	kg	lb.	kg
RT600E Basic Machine	71,691	32,519	32,934	14,939	38,757	17,580
ADD: 29 - 51 ft. tele swingaway	2,109	957	3,456	1,568	-1,347	-611
ADD: 29 ft. swingaway	1,493	677	2,506	1,137	-1,013	-459
ADD: Auxiliary hoist cable	563	255	-213	-97	775	352
ADD: Auxiliary boom nose	131	59	358	162	-227	-103
ADD: 40 ton (35 mt) 3 sheave hookblock (stowed in trough)	800	363	822	373	-22	-10
ADD: 50 ton (45 mt) 3 sheave hookblock (stowed in trough)	1,000	454	1,027	466	-27	-12
ADD: 8.3 ton (7.5 mt) headache ball (hanging from aux. nose)	370	168	643	292	-273	-124
Remove: Counterweight	-11,250	-5,103	4,570	2,073	-15,820	-7,176

working range

Working range – 105 ft. Main Boom

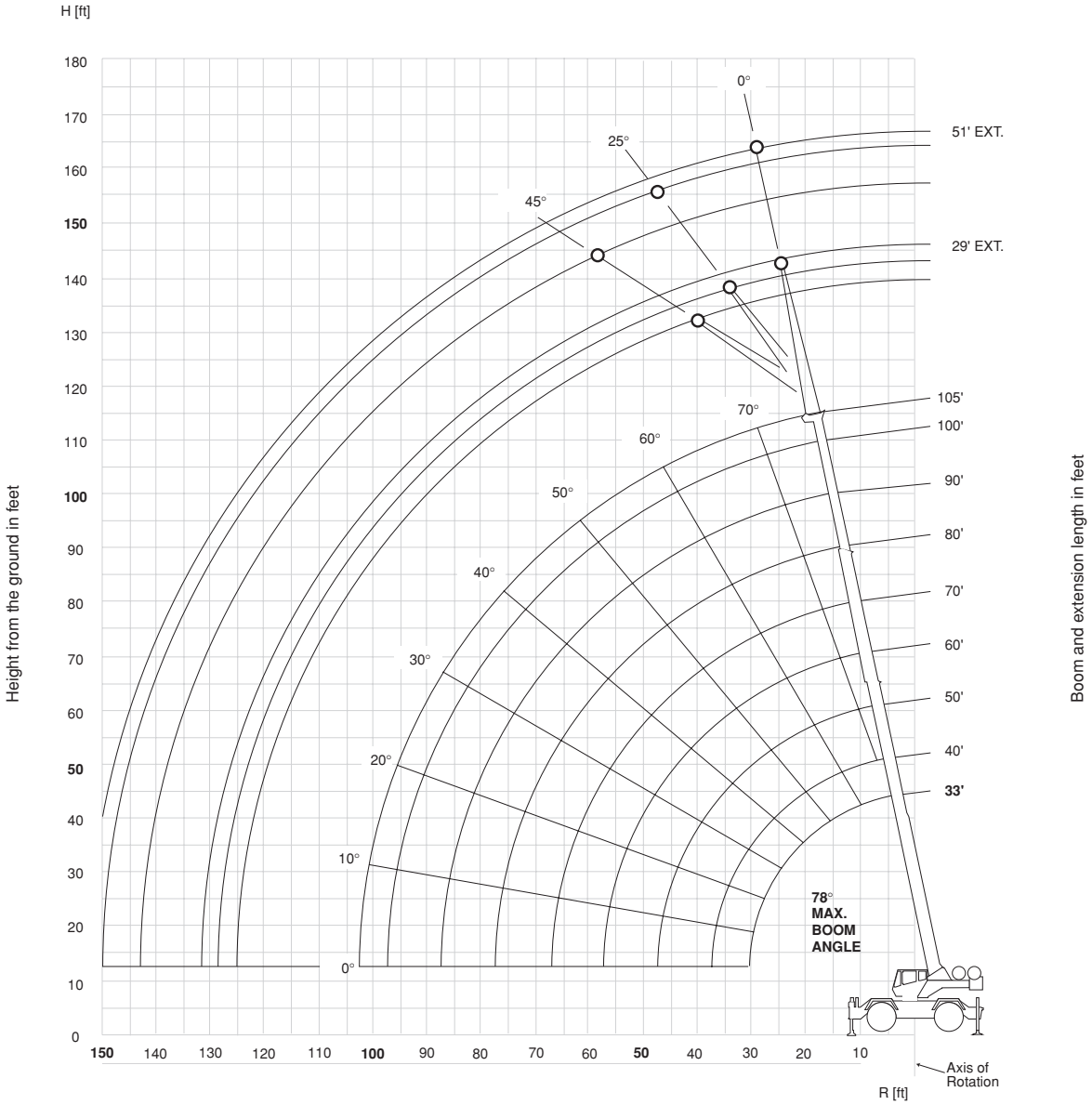

Operating Radius in Feet From Axis of Rotation

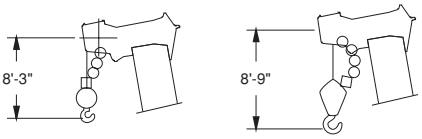

Dimensions are for Largest Grove furnished Hook Block and Headache Ball, with Anti-Two Block Activated.

THIS CHART IS ONLY A GUIDE AND SHOULD NOT BE USED TO OPERATE THE CRANE. The individual crane's load chart, operating instructions and other instructional plates must be read and understood prior to operating the crane.

RT650E load chart

33-105 ft. | 11,250 lbs | 100% 22' 6" spread | 360

Pounds

Feet	33	40	50	60	70	80	90	100	105
10	100,000 (69.5)	80,550 (73.5)	67,250 (77)						
12	87,100 (65.5)	79,150 (70.5)	64,200 (75)	*56,100 (78)					
15	69,050 (59.5)	69,550 (65.5)	59,950 (71)	51,800 (75)	45,200 (77.5)				
20	50,500 (47.5)	50,950 (57)	51,400 (64.5)	44,500 (69.5)	38,550 (73)	34,450 (75.5)	*31,400 (78)		
25	38,300 (32)	38,850 (47)	39,350 (58)	39,650 (64.5)	37,100 (68.5)	29,850 (72)	27,250 (74.5)	21,000 (76.5)	18,350 (77.5)
30		30,700 (34.5)	31,200 (50.5)	31,500 (58.5)	31,700 (64)	26,350 (68)	24,100 (71)	21,000 (73.5)	18,350 (74.5)
35			25,450 (41.5)	25,750 (52.5)	26,000 (59)	23,650 (64)	21,500 (67.5)	19,150 (70)	18,350 (71.5)
40	See Note 16		20,850 (30.5)	21,200 (46)	21,600 (54)	21,350 (59.5)	19,400 (64)	16,650 (67)	17,300 (68.5)
45				17,100 (38)	17,350 (48.5)	17,300 (55)	17,300 (60)	14,650 (64)	15,750 (65.5)
50				13,950 (28)	14,150 (42.5)	14,200 (50.5)	14,200 (56)	13,000 (60.5)	14,300 (62.5)
55					11,700 (35)	11,750 (45.5)	11,850 (52)	11,900 (57)	12,000 (59)
60					9,730 (26)	9,870 (39.5)	9,980 (47.5)	10,100 (53.5)	10,150 (55.5)
65						8,300 (33)	8,440 (42.5)	8,600 (49.5)	8,680 (52)
70						6,960 (24.5)	7,170 (37.5)	7,340 (45.5)	7,430 (48.5)
75							6,080 (31)	6,290 (40.5)	6,390 (44.5)
80							5,130 (23)	5,380 (35.5)	5,490 (40)
85								4,580 (29.5)	4,720 (35)
90								3,880 (22)	4,020 (29)
95									3,400 (21.5)
Minimum boom angle (∞) for indicated length (no load)									0
Maximum boom length (ft.) at 0∞ boom angle (no load)									105

NOTE: ( ) Boom angles are in degrees.
#LMI operating code. Refer to LMI manual for operating instructions.
*This capacity is based on maximum boom angle.

Lifting Capacities at Zero Degree Boom Angle On Outriggers Fully Extended - 360∞

Boom Angle	Main Boom Length in Feet 33	40	50	60	70	80	90	100
0∞	16,250 (28.2)	12,500 (35)	8,780 (45)	6,290 (55)	4,510 (65)	3,160 (75)	2,110 (85)	1,260 (95)

NOTE: ( ) Reference radii in feet.

A6-829-100936

THIS CHART IS ONLY A GUIDE AND SHOULD NOT BE USED TO OPERATE THE CRANE. The individual crane's load chart, operating instructions and other instructional plates must be read and understood prior to operating the crane.

RT640E load chart

33-105 ft. | 11,250 lbs | 100% 22' 6" spread | 360

Pounds

Feet	33	40	50	60	70	80	90	100	105
10	80,000 (69.5)	73,500 (73.5)	67,200 (77)						
12	77,750 (65.5)	69,500 (70.5)	62,300 (75)	*56,100 (78)					
15	69,050 (59.5)	65,550 (65.5)	57,300 (71)	51,800 (75)	45,200 (77.5)				
20	50,500 (47.5)	50,950 (57)	51,400 (64.5)	44,500 (69.5)	38,550 (73)	34,450 (75.5)	*31,400 (78)		
25	38,300 (32)	38,850 (47)	39,350 (58)	39,650 (64.5)	37,100 (68.5)	29,850 (72)	27,250 (74.5)	21,000 (76.5)	18,350 (77.5)
30		30,700 (34.5)	31,200 (50.5)	31,500 (58.5)	31,700 (64)	26,350 (68)	24,100 (71)	21,000 (73.5)	18,350 (74.5)
35			25,450 (41.5)	25,750 (52.5)	26,000 (59)	23,650 (64)	21,500 (67.5)	19,150 (70)	18,350 (71.5)
40	See Note 16		20,850 (30.5)	21,200 (46)	21,600 (54)	21,350 (59.5)	19,400 (64)	16,650 (67)	17,300 (68.5)
45				17,100 (38)	17,350 (48.5)	17,300 (55)	17,300 (60)	14,650 (64)	15,750 (65.5)
50				13,950 (28)	14,150 (42.5)	14,200 (50.5)	14,200 (56)	13,000 (60.5)	14,300 (62.5)
55					11,700 (35)	11,750 (45.5)	11,850 (52)	11,900 (57)	12,000 (59)
60					9,730 (26)	9,870 (39.5)	9,980 (47.5)	10,100 (53.5)	10,150 (55.5)
65						8,300 (33)	8,440 (42.5)	8,600 (49.5)	8,680 (52)
70						6,960 (24.5)	7,170 (37.5)	7,340 (45.5)	7,430 (48.5)
75							6,080 (31)	6,290 (40.5)	6,390 (44.5)
80							5,130 (23)	5,380 (35.5)	5,490 (40)
85								4,580 (29.5)	4,720 (35)
90								3,880 (22)	4,020 (29)
95									3,400 (21.5)
Minimum boom angle (∞) for indicated length (no load)									0
Maximum boom length (ft.) at 0∞ boom angle (no load)									105

NOTE: ( ) Boom angles are in degrees.
#LMI operating code. Refer to LMI manual for operating instructions.
*This capacity is based on maximum boom angle.

Lifting Capacities at Zero Degree Boom Angle On Outriggers Fully Extended - 360∞

Boom Angle	Main Boom Length in Feet 33	40	50	60	70	80	90	100	105
0∞	16,250 (28.2)	12,500 (35)	8,780 (45)	6,290 (55)	4,510 (65)	3,160 (75)	2,110 (85)	1,260 (95)	

NOTE: ( ) Reference radii in feet.

A6-829-100832A

THIS CHART IS ONLY A GUIDE AND SHOULD NOT BE USED TO OPERATE THE CRANE. The individual crane's load chart, operating instructions and other instructional plates must be read and understood prior to operating the crane.

RT600E load charts

33-105 ft. | 29 - 51ft. | 11,250 lbs | 100% 22' 6" spread | 360

Pounds

Feet	**29 ft. LENGTH #0021 0∞ OFFSET	#0022 25∞ OFFSET	#0023 45∞ OFFSET	51 ft. LENGTH #0041 0∞ OFFSET	#0042 25∞ OFFSET	#0043 45∞ OFFSET
30	*9,000 (78)					
35	9,000 (77)			*6,000 (78)		
40	9,000 (74.5)	8,000 (77.5)		6,000 (77)		
45	9,000 (72.5)	7,560 (76)	*5,660 (78)	6,000 (76)		
50	8,760 (70)	7,170 (74)	5,600 (76)	6,000 (74)		
55	8,030 (67.5)	6,820 (71.5)	5,500 (73.5)	6,000 (72)	*4,120 (78)	
60	7,380 (65)	6,500 (69)	5,300 (71)	6,000 (70)	3,900 (77)	
65	6,770 (62.5)	6,210 (66.5)	5,180 (68.5)	6,000 (68)	3,710 (75)	*2,740 (78)
70	6,210 (60)	5,950 (64)	4,890 (66)	5,620 (66)	3,530 (72.5)	2,660 (76.5)
75	5,710 (57.5)	5,710 (61.5)	4,620 (63)	5,210 (64)	3,370 (70.5)	2,580 (74)
80	5,250 (55)	5,500 (58.5)	4,370 (60.5)	4,860 (61.5)	3,220 (68.5)	2,520 (72)
85	4,790 (52)	5,300 (56)	4,100 (57.5)	4,540 (59.5)	3,080 (66)	2,460 (69.5)
90	4,090 (49)	4,650 (53)	3,820 (54)	4,260 (57)	2,960 (63.5)	2,410 (67)
95	3,480 (46)	3,960 (49.5)		4,000 (55)	2,850 (61.5)	2,360 (64.5)
100	2,930 (42.5)	3,350 (46)		3,770 (52.5)	2,750 (59)	2,330 (62)
105	2,440 (39)	2,810 (42.5)		3,360 (50)	2,660 (56)	2,300 (59)
110	2,000 (35)	2,320 (38.5)		2,910 (47.5)	2,570 (53.5)	2,280 (56)
115	1,610 (30.5)			2,500 (44.5)	2,500 (50.5)	
120	1,250 (25.5)			2,120 (41.5)	2,430 (47.5)	
125				1,780 (38.5)	2,250 (44.5)	
130				1,470 (35)	1,820 (40.5)	
135				1,180 (31)	1,420 (36.5)	
Min. boom angle for indicated length (no load)	24∞	32∞	45∞	25∞	35∞	45∞
Max. boom length at 0∞ boom angle (no load)		90 ft.			90 ft.	

NOTE: ( ) Boom angles are in degrees. A6-829-100845A
#LMI operating code. Refer to LMI manual for instructions.
*This capacity based on maximum boom angle.
**29 ft. capacities are also applicable to fixed offsettable ext. However, the LMI codes will change to #0051, #0052 and #0053 for 0∞, 25∞ and 45∞ offset, respectively

33-105 ft. | 11,250 lbs | Stationary | 360

Pounds

Feet	#9005 Main Boom Length in Feet 33	40	50	60	70
10	38,550 (69.5)	38,550 (73.5)			
12	32,550 (65.5)	32,550 (70.5)	32,550 (75)		
15	23,700 (59.5)	23,700 (65.5)	23,700 (71)	23,700 (75)	
20	14,450 (47.5)	14,450 (57)	14,450 (64.5)	14,450 (69.5)	14,450 (73)
25	9,640 (32)	9,640 (47)	9,640 (58)	9,640 (64.5)	9,640 (68.5)
30		6,840 (34.5)	6,840 (50.5)	6,840 (58.5)	6,840 (64)
35			4,850 (41.5)	4,850 (52.5)	4,850 (59)
40			3,450 (30.5)	3,450 (46)	3,450 (54)
45				2,410 (38)	2,410 (48.5)
50				1,610 (28)	1,610 (42.5)
Min. boom angle (∞) for indicated length (no load)					30
Max. boom length (ft.) at 0∞ boom angle (no load)					60

NOTE: ( ) Boom angles are in degrees.
#LMI operating code. Refer to LMI manual for operating instructions.

Lifting Capacities at Zero Degree Boom Angle On Rubber - 360∞

Boom Angle	Main Boom Length in Feet 33	40	50
0∞	7,580 (28.2)	4,850 (35)	2,410 (45)

NOTE: ( ) Reference radii in feet. A6-829-100836B

NOTES:

1. All capacities above the bold line are based on structural strength of boom extension.
2. 29 ft. and 51 ft. boom extension lengths may be used for single line lifting service.
3. Radii listed are for a fully extended boom with the boom extension erected. For main boom lengths less than fully extended, the rated loads are determined by boom angle. Use only the column which corresponds to the boom extension length and offset for which the machine is configured. For boom angles not shown, use the rating of the next lower boom angle.
   WARNING: Operation of this machine with heavier loads than the capacities listed is strictly prohibited. Machine tipping with boom extension occurs rapidly and without advance warning.
4. Boom angle is the angle above or below horizontal of the longitudinal axis of the boom base section after lifting rated load.
5. Capacities listed are with outriggers fully extended and vertical jacks set.

THIS CHART IS ONLY A GUIDE AND SHOULD NOT BE USED TO OPERATE THE CRANE. The individual crane's load chart, operating instructions and other instructional plates must be read and understood prior to operating the crane.

load charts

33-105 ft. | 11,250 lbs | Stationary | Defined arc over front

Pounds

#9005

Feet	Main Boom Length in Feet 33	40	50	60	70
10	46,600 (69.5)	40,800 (73.5)	34,600 (77)		
12	40,800 (65.5)	40,800 (70.5)	34,600 (75)		
15	34,000 (59.5)	34,000 (65.5)	34,000 (71)	26,650 (75)	21,500 (77.5)
20	26,050 (47.5)	26,050 (57)	26,050 (64.5)	26,050 (69.5)	21,500 (73)
25	18,200 (32)	18,200 (47)	18,200 (58)	18,200 (64.5)	18,200 (68.5)
30		13,100 (34.5)	13,100 (50.5)	13,100 (58.5)	13,100 (64)
35			10,050 (41.5)	10,050 (52.5)	10,050 (59)
40			7,900 (30.5)	7,900 (46)	7,900 (54)
45				6,290 (38)	6,290 (48.5)
50				5,050 (28)	5,050 (42.5)
55					4,060 (35)
60					3,260 (26)
Min. boom angle (∞) for indicated length (no load)					0
Max. boom length (ft.) at 0∞ boom angle (no load)					70

NOTE: ( ) Boom angles are in degrees.
#LMI operating code. Refer to LMI manual for operating instructions.

Lifting Capacities at Zero Degree Boom Angle On Rubber - Defined Arc Over Front

Boom Angle	Main Boom Length in Feet 33	40	50	60	70
0∞	14,550 (28.2)	10,050 (35)	6,290 (45)	4,060 (55)	2,590 (65)

NOTE: ( ) Reference radii in feet. A6-829-100835B

33-105 ft. | 11,250 lbs | Pick & carry up to 2.5 mph | Boom centered over front

Pounds

#9006

Feet	Main Boom Length in Feet 33	40	50	60	70
10	30,150 (69.5)	30,150 (73.5)	17,850 (77)		
12	30,150 (65.5)	30,150 (70.5)	17,850 (75)		
15	29,650 (59.5)	29,650 (65.5)	17,850 (71)	17,850 (75)	14,750 (77.5)
20	22,650 (47.5)	22,650 (57)	17,850 (64.5)	17,850 (69.5)	14,750 (73)
25	17,850 (32)	17,850 (47)	17,850 (58)	17,850 (64.5)	14,750 (68.5)
30		13,100 (34.5)	13,100 (50.5)	13,100 (58.5)	13,100 (64)
35			10,050 (41.5)	10,050 (52.5)	10,050 (59)
40			7,340 (30.5)	7,340 (46)	7,340 (54)
45				6,020 (38)	6,020 (48.5)
50				4,940 (28)	4,940 (42.5)
55					4,030 (35)
60					3,260 (26)
Min. boom angle (∞) for indicated length (no load)					0
Max. boom length (ft.) at 0∞ boom angle (no load)					70

NOTE: ( ) Boom angles are in degrees.
#LMI operating code. Refer to LMI manual for operating instructions.

Lifting Capacities at Zero Degree Boom Angle On Rubber - Pick & Carry

Boom Angle	Main Boom Length in Feet 33	40	50	60	70
0∞	14,550 (28.2)	10,050 (35)	6,020 (45)	4,030 (55)	2,590 (65)

NOTE: ( ) Reference radii in feet. A6-829-100837B

THIS CHART IS ONLY A GUIDE AND SHOULD NOT BE USED TO OPERATE THE CRANE. The individual crane's load chart, operating instructions and other instructional plates must be read and understood prior to operating the crane.

Weight Reductions for Load Handling Devices

29 Ft. Offsettable Boom Extension	Pounds
*Erected –	4,412

29 Ft. 51 ft. Tele. Boom Extension	Pounds
*Erected (Retracted) –	6,611
*Erected (Extended) –	9,332

*Reduction of main boom capacities

Auxiliary Boom Nose	Pounds
	137

Hookblocks and Headache Balls	Pounds
50 Ton, 4 Sheave	1075
50 Ton, 3 Sheave	1000
40 Ton, 3 Sheave	800
8.3 Ton Headache Ball (non-swivel)	350
8.3 Ton Headache Ball (swivel)*	370

+Refer to rating plate for actual weight.

When lifting over swingaway and/or jib combinations, deduct total weight of all load handling devices reeved over main boom nose directly from swingaway or jib capacity.

NOTE: All load handling devices and boom attachments are considered part of the load and suitable allowances MUST BE MADE for their combined weights. Weights are for Grove furnished equipment.

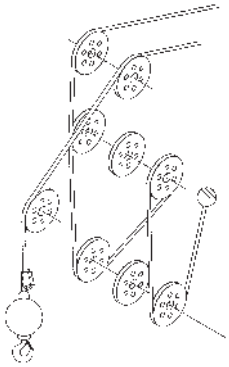

Line Pulls and Reeving Information

Hoists	Cable Specs	Permissible Line Pulls	Nominal Cable Length
Main	3/4" (19 mm) 6x37 Class EIPS, IWRC Special Flexible Min. Breaking Str. 58,800 lb.	16,800 lb.	450 ft.
Main & Aux.	3/4" (19 mm) Flex - X 35 Rotation Resistance (non-rotating) Min. Breaking Strength 85,500 lb.	16,800 lb.	450 ft.

Hoist Performance

Wire Rope Layer	Hoist Line Pulls Two Speed Hoist Low Available lb.*	High Available lb.*	Drum Rope Capacity (ft.) Layer	Total
1	18,134	9,067	78	78
2	16,668	8,334	85	164
3	15,420	7,710	92	256
4	14,347	7,174	99	356
5	13,413	6,707	106	462
6	12,594	6,297	113	575

*Max. lifting capacity: 6x37 or 35x7 class = 16,800 lb.

Working Area Diagram

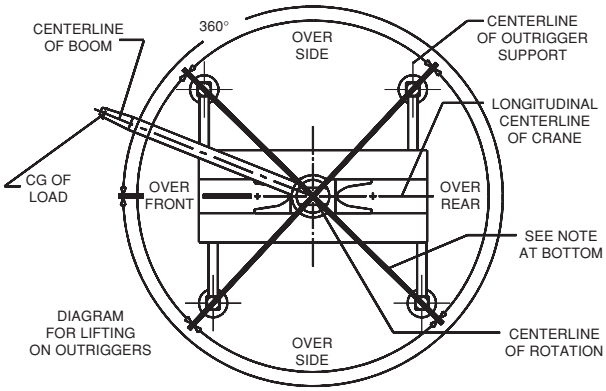

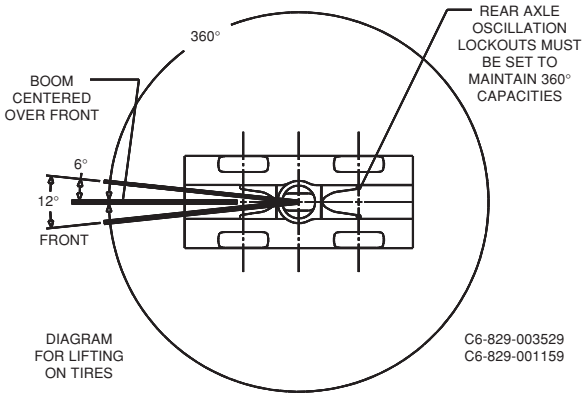

Bold lines determine the limiting position of any load for operation within working areas indicated.

THIS CHART IS ONLY A GUIDE AND SHOULD NOT BE USED TO OPERATE THE CRANE. The individual crane's load chart, operating instructions and other instructional plates must be read and understood prior to operating the crane.

GROVE®

Manitowoc Crane Group - Americas
Manitowoc, Wisconsin Facility
Tel: [Int + 001] 920 684 6621
Fax: [Int + 001] 920 683 6277
Shady Grove, Pennsylvania Facility
Tel: [Int + 001] 717 597 8121
Fax: [Int + 001] 717 597 4062

Manitowoc Crane Group - EMEA
Europe Middle East & Africa
Tel: [Int + 33] (0) 4 72 18 20 20
Fax: [Int + 33] (0) 4 72 18 20 00

Manitowoc Crane Group - UK
Europe Middle East & Africa (Parts & Service)
Tel: [Int + 44] (0) 191 565-6281
Fax: [Int + 44] (0) 191 564-0442

Manitowoc Crane Group - Germany
(Sales, Parts & Service)
Tel: [Int + 49] (0) 2173 8909-0
Fax: [Int + 49] (0) 2173 8909-30

Manitowoc Crane Group - France
France & Africa (Sales, Parts & Service)
Tel: [Int + 33] (0) 1 303-13150
Fax: [Int + 33] (0) 1 303-86085

Manitowoc Crane Group - Netherlands
(Sales, Parts & Service)
Tel: [Int + 31] (0) 76 578 39 99
Fax: [Int + 31] (0) 76 578 39 78

Manitowoc Crane Group - Italy
Italy & Southern Europe (Sales, Parts & Service)
Tel: [Int + 39] (0) 331 49 33 11
Fax: [Int + 39] (0) 331 49 33 30

Manitowoc Crane Group - Portugal
Portugal & Spain (Sales, Parts & Service)
Tel: [Int + 351] (0) 22 968 08 89
Fax: [Int + 351] (0) 22 968 08 97

Manitowoc Crane Group - Singapore
Asia/Pacific excl China (Sales, Parts & Service)
Tel: [Int + 65] 6861-7133
Fax: [Int + 65] 6862-4040 / 4142

Manitowoc Crane Group - Shanghai
China (Sales, Parts & Service)
Tel: [Int + 86] (0) 21-64955555
Fax: [Int + 86] (0) 21-64852038

Manitowoc Crane Group - Beijing
China (Sales, Parts & Service)
Tel: [Int + 86] (0) 10 646-71690
Fax: [Int + 86] (0) 10 646-71691

Manitowoc Crane Group - Middle East
(Sales)
Tel: [Int + 971] (0) 4 348-4478
Fax: [Int + 971] (0) 4 348-4478
(Parts & Service)
Tel: [Int + 973] (0) 9 660-899
Fax: [Int + 973] (0) 2 707-740

Distributed By:

Manitowoc Crane CARE

www.manitowoccranegroup.com

Constant improvement and engineering progress make it necessary that we reserve the right to make specification, equipment, and price changes without notice. Illustrations shown may include optional equipment and accessories, and may not include all standard equipment.

0704-2M Printed in USA Form No. RT600E PG Part No. 03-473 Manitowoc Crane Group 2004